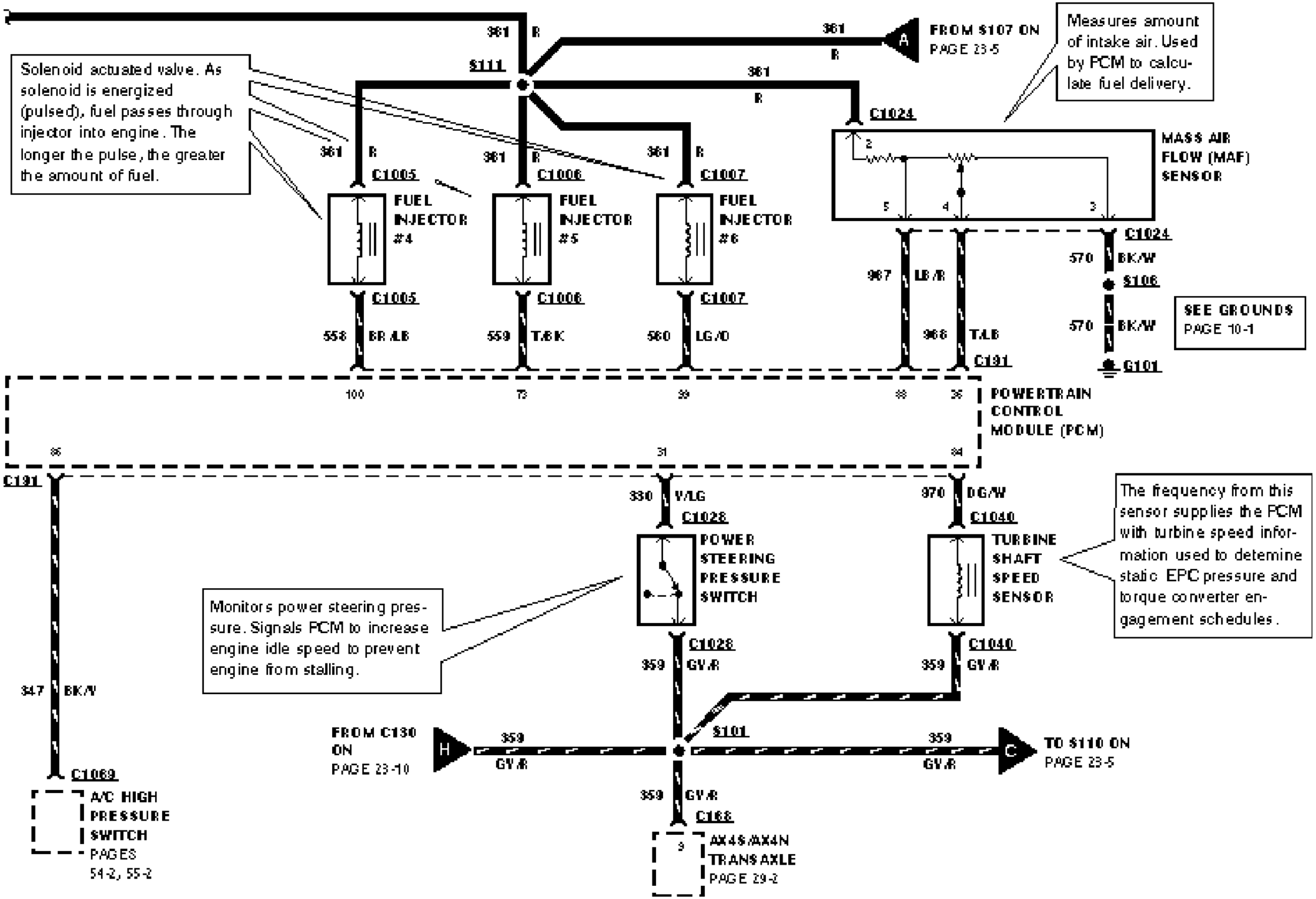
Solenoid actuated valve. As solenoid is energized (pulsed), fuel passes through injector into engine. The longer the pulse, the greater the amount of fuel.
Measures amount of intake air. Used by PCM to calculate fuel delivery.
361 R
S111
FROM S107 ON
PAGE 23-5
C1024
MASS AIR FLOW (MAF) SENSOR
C1005
C1006
C1007
FUEL INJECTOR #4
FUEL INJECTOR #5
FUEL INJECTOR #6
558 BR/LB
559 T/BK
560 LG/O
967 LB/R
966 T/LB
570 BK/W
S106
G101
SEE GROUNDS
PAGE 10-1
C191
POWERTRAIN CONTROL MODULE (PCM)
330 V/LG
970 DG/W
C1028
C1040
POWER STEERING PRESSURE SWITCH
TURBINE SHAFT SPEED SENSOR
The frequency from this sensor supplies the PCM with turbine speed information used to detemine static EPC pressure and torque converter engagement schedules.
Monitors power steering pressure. Signals PCM to increase engine idle speed to prevent engine from stalling.
359 GY/R
347 BK/V
C1069
A/C HIGH PRESSURE SWITCH
PAGES 54-2, 55-2
FROM C130 ON
PAGE 23-10
S101
TO S110 ON
PAGE 23-5
C168
AX4S/AX4N TRANSAXLE
PAGE 29-2